JUSTIME SINCE 1976

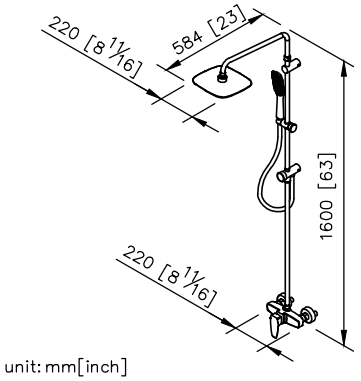


# Rainshower System

## 6779-BF-80CP
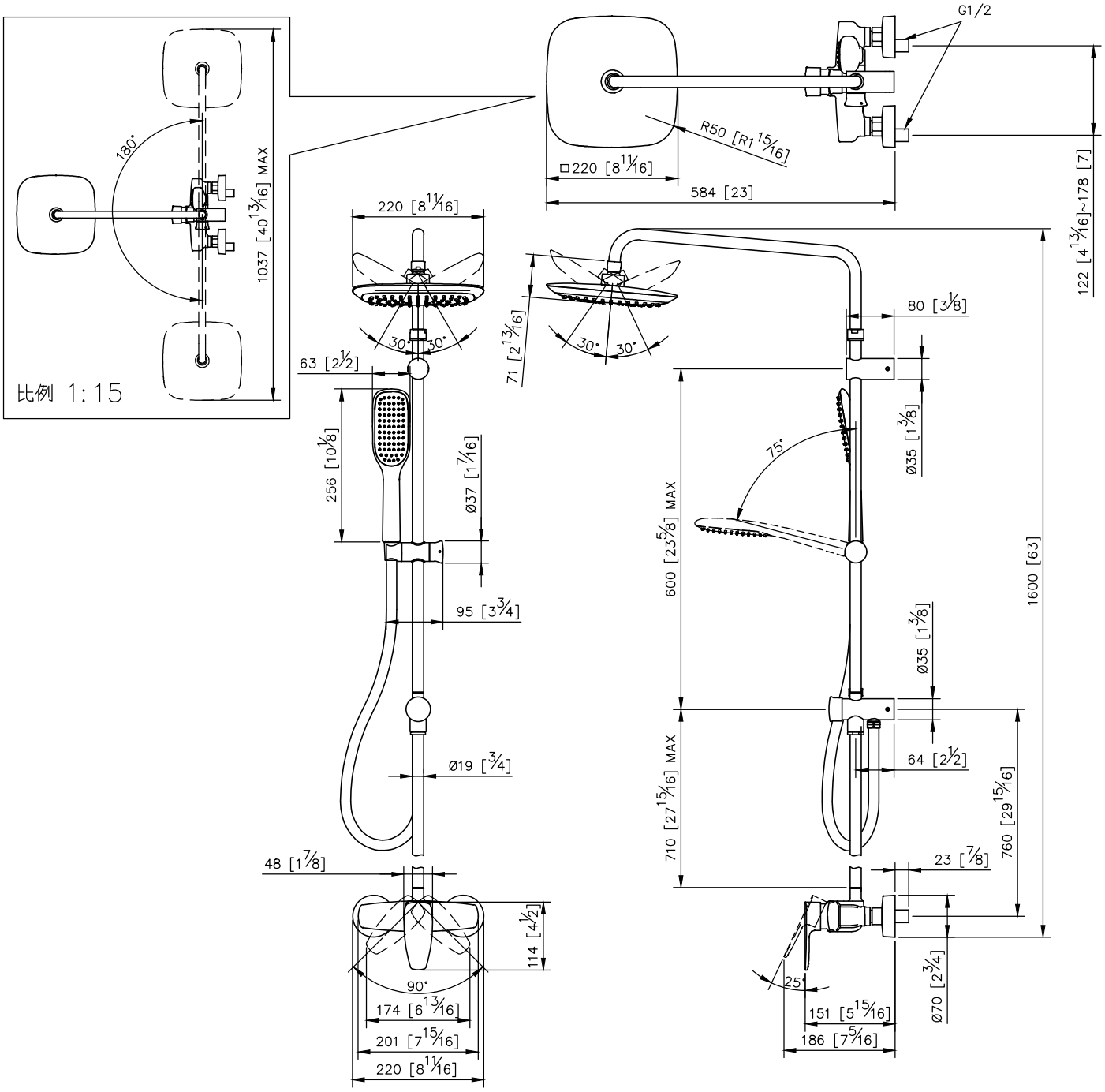
1.Brass with Chrome plated meets ASTM-SC2 standard; 5 years guarantee.
2.Adjust the water supply to hand shower or rain shower by pressing deverter.
3.The faucet should be used at the water presure from 1 to 4 kg/cm^2.
4.Ceramic valve with CERAMTEC ceramic disc / (Germany).
5.Elastic shower hose can be extended from 1.5 meter to 2 meter.
6.Adjustable angle of the hand-shower bracket.
7.Massage spray.
8.Saturating & massage spray.
9.The available distance between two centers of wall water-outlet is 122mm to 178mm.
10.With G 1/2 to water supply wall outlet.